166768
314-0510

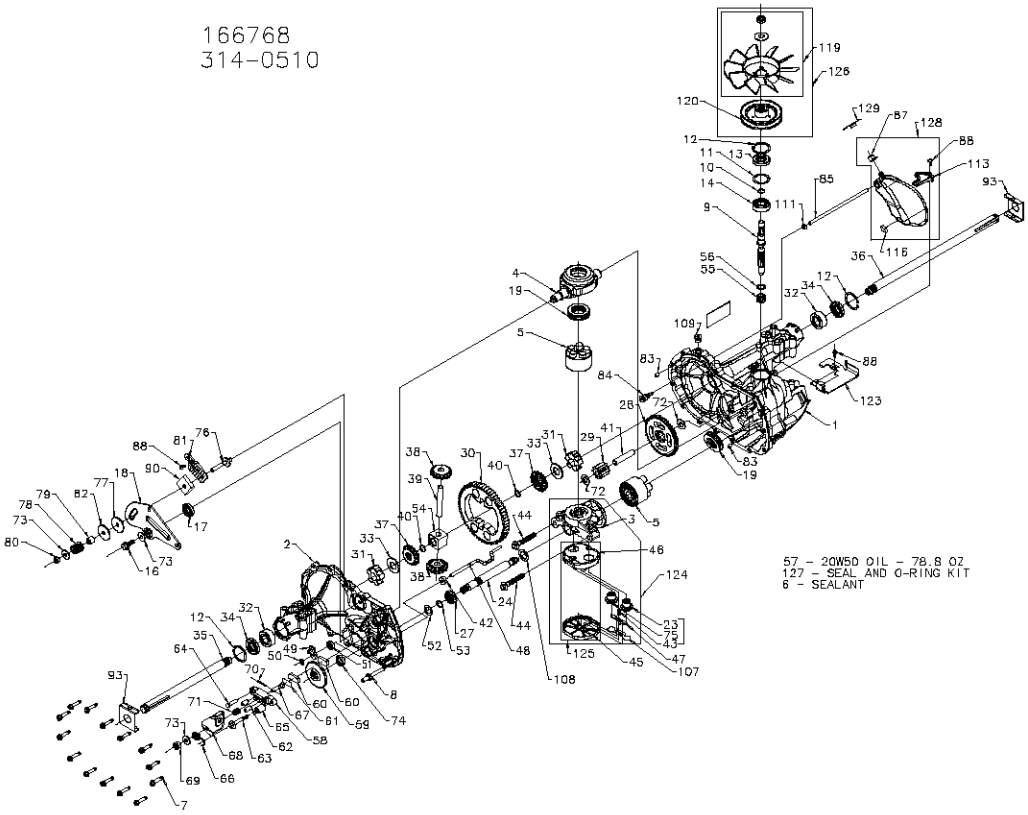

Hydro-Gear

166768
314-0510

ITEM	PART NUMBER	QTY	DESCRIPTION
1	70467	1	MAIN HOUSING, ASSEMBLY
		1	MAIN HOUSING, MACHINED
		1	BUSHING .885 X .985 X .790
2	70483	1	SIDE HOUSING, ASSEMBLY
		1	SIDE HOUSING, MACHINED
		1	BUSHING .885 X .985 X .790
		1	BUSHING, .624 X .719 X .562
3	70477	1	CENTER SECTION, ASSEMBLY
		1	CENTER SECTION, MACHINED
		1	BUSHING, .707 X .788 X .591
4	51048	1	SWASHPLATE, TRUNNION MACHINED
5	70331	2	BLOCK - ASSEMBLY
		1	BLOCK - CYLINDER
		5	PISTON
		5	SPRING, COMPRESSION
		5	WASHER - THRUST
6	50928	10.3 OZ	SEALANT
7	51190	14	HEX FLANGE SCREW 1/4-20 X 1.25
8	51061	1	STUD, 5/16-24 HEX DOUBLE END
9	51062	1	SHAFT, INPUT
10	2000022	1	RING - RETAINING
11	50951	1	SPACER
12	50329	3	RING - RETAINING
13	51161	1	SEAL, LIP .67 X 1.58 X .276
14	50315	1	BALL BRG 17MM ID X 40MM OD X 12MM
16	51064	1	HEX FLANGE HEAD SCREW 5/16-24 X 0.75
17	51140	1	LIP SEAL 18 X 32 X 7
18	51204	1	ARM, CONTROL
19	50551	2	BEARING, 30X62X13 THRUST
23	51207	1	CHECK PLUG ASSEMBLY, WASHER
24	50966	1	SHAFT, MOTOR
27	51130	1	GEAR - PINNION, 13T
28	51129	1	10T/48T GEAR
29	51043	1	GEAR, 10T JACKSHAFT
30	51044	1	60T BULL GEAR
31	51088	2	SLEEVE BEARING .75 X 1.750 X .625
32	51089	2	SLEEVE BEARING (OUTBOARD) .75 X 1.575 X .825
33	44875	2	WASHER, 3/4 ID X 1-1/2 OD X .13 THK
34	51066	2	LIP SEAL AXLE SEAL
35	51068	1	SHAFT, AXLE .75 x 11.39 (KEY, R.H.)
36	51067	1	SHAFT, AXLE .75 X 16.99 (KEY, L.H.)
37	44066	2	MITER GEAR (SPLINED)
38	44067	2	MITER GEAR 15T (0.5 ID)
39	50148	1	SHAFT
40	44871	2	RING, SPIRAL RETAINING
41	51083	1	PIN, JACKSHAFT
42	51100	1	MAGNET, RING
43	51136	1	SPRING, BYPASS
44	50016	2	HYDRO MTG SCREW 3/8-24 X 2.5 LONG
45	51132	1	FILTER
46	51133	1	BASE, FILTER
47	51091	1	ACTUATOR, BYPASS
48	51098	1	ROD, BYPASS ACTUATOR
49	51099	1	ARM, BYPASS
50	51116	1	RETAINING RING .250 EXTERNAL
51	51081	1	SEAL, LIP .741 X .250 x .250 TC
52	44371	1	FLAT WASHER, 5/8 ID X 1.0 OD X .06 THK
53	44145	1	RETAINING RING
54	51071	1	BEARING, CENTER BLOCK
55	2003014	1	SPRING - HELICAL COMPRESSION
56	2003017	1	WASHER
57		78.8 OZ	20W-50 OIL
58	44092	1	BRAKE YOKE
59	51072	1	ROTOR, BRAKE
60	44132	2	BRAKE PUCK
61	44134	1	PUCK PLATE
62	44127	2	BRAKE ACTUATING PIN
63	51146	1	HFHCS 1/4-20 X 2 W/PATCH, SPECIAL FLANGE
64	44433	1	BOLT, 1/4-20 X 1 W/PATCH
65	23711	1	SPACER

ITEM	PART NUMBER	QTY	DESCRIPTION
66	50884	1	SPRING, BRAKE ARM BIAS
67	44138	1	SQ.HD.BOLT 5/16-24- RIBBED
68	23710	1	ARM, BRAKE
69	44142	1	SLOTTED HEX NUT 5/16-24
70	44101	1	COTTER PIN 3/32 X 3/4
71	50919	1	COMPRESSION SPRING BRAKE ANTI-DRAG
72	50132	2	WASHER, HT .5 I.D. X 1.0 O.D. X .032
73	44130	3	FLAT - WASHER 11/32 I.D. X 7/8 O.D
74	44761	1	OIL SEAL .625 X 1.0 X.25
75	51084	1	CHECK PLUG ASSEMBLY, .027, WASHER
76	50284	1	STUD, 5/16-24 FRICTION PACK
77	51113	1	PUCK, .330 X 1.50 X .0975
78	50277	1	SPRING, HELICAL COMP
79	50276	1	SPACER
80	50317	1	HEX LOCK NUT 5/16-24 UNJF (NYLON INSERT)
81	51226	1	WEDGE, FRICTION PACK
82	51114	1	CLIP, WASHER .316 X 1.50 X .1046 (PLATED)
83	9004500-2506	2	PIN, STANDARD HEADLESS
84	51143	1	FITTING, 5/16 SAE 5/32 TUBE
85	51147	1	HOSE, EXPANSION TANK
87	51251	1	CAP, VENT
88	50653	3	BOLT, SELF TAPPING 10-32 X 1/2
90	51227	1	PUCK, INNER WEDGE
93	51118	2	SPRING CLIP - HOUSING THRUST
107	51134	1	DEFLECTOR
108	51069	1	WASHER, MOTOR SHAFT .71 ID X 1.15 OD X .030 THK
109	9005110-5600	1	PLUG, SAE #5
111	51144	1	O-RING .07 X .301 ID
113	51179	1	BRACKET,SUPPORT EXPANSION TANK
116	51196	1	SILICON SPONGE
119	70679	1	FAN-WASHER-NUT SERVICE KIT
		1	FAN, 7 IN
		1	HEX LOCK NUT 1/2-20 (NYLON INSERT)
		1	WASHER, BELLEVILLE
120	51231	1	PULLEY
123	51229	1	BELT KEEPER
124	70464	1	CENTER SECTION - FILTER - BYPASS ASSEMBLY
		1	CENTER SECTION MACHINING
		1	BASE FILTER
		1	CHECK PLUG ASSEMBLY, .027 WASHER
		1	CHECK PLUG ASSEMBLY, WASHER
		1	SPRING, BYPASS
		1	ACTUATOR,BYPASS
		1	DEFLECTOR
		1	FILTER
		1	BUSHING, .707 X .788 X .591
125	70466	1	FILTER ASSEMBLY
		1	FILTER
		1	BASE, FILTER
126	70450	1	FAN - PULLEY SERVICE ASSEMBLY
		1	HEX JAM 1/20-20 (NYLON INSERT)
		1	WASHER, BELLEVILLE
		1	FAN, 7 IN
		1	PULLEY
127	70463	1	SEAL - O-RING KIT
		1	SEAL, LIP .67 X 1.58 X .276
		1	LIP SEAL 18 X 32 X 7
		2	LIP SEAL .708 X 1.584 X .25
		1	SEAL, LIP .741 X .250 X .250 TC
		1	OIL SEAL .625 X 1.0 X .25
		1	O-RING .07 X .301 ID
128	70503	1	KIT, EXPANSION TANK
		1	TANK, EXPANSION
		1	CAP,VENT
		1	BOLT, SELF TAPPING 10-32 X 1/2
		1	BRACKET, SUPPORT EXPANSION TANK
		1	SILICON SPONGE 1/2 X 1/2 X 3/16
129	51252	1	CAP, EXPANSION TANK SHIPPING

Hydro-Gear